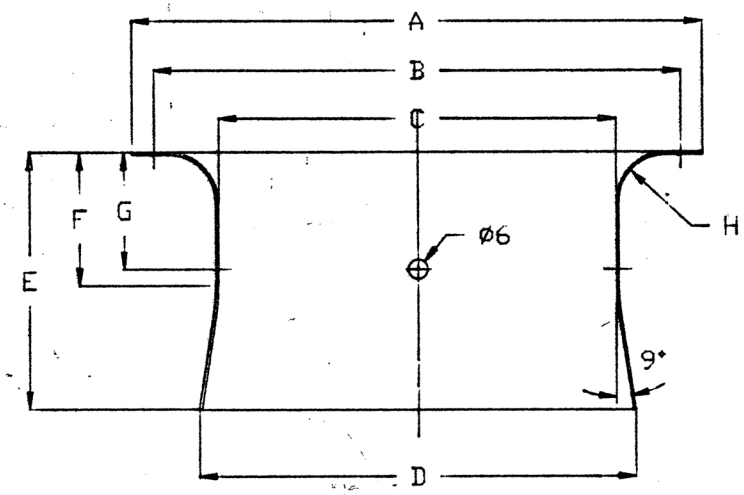

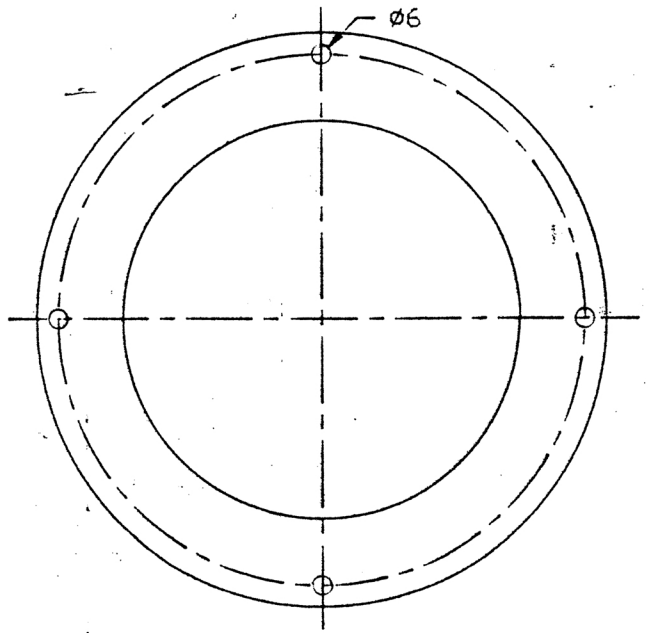

DN	A	B	C	D	E	F	G	H
100	96,5	85,0	68,5	75,0	46,0	25,0	20,0	10
125	121,5	109,5	87,5	95,4	54,0	29,0	25,0	10
140	136,5	124,0	97,5	106,3	60,0	32,0	28,0	15
150	146,5	133,0	97,5	106,3	60,0	32,0	28,0	15
160	156,5	143,0	109,5	119,6	68,0	36,0	32,0	15
180	176,5	163,0	122,5	134,8	75,0	40,0	36,0	15
200	196,5	183,0	137,5	150,0	84,0	44,0	40,0	15
224	220,5	207,0	157,5	174,2	96,0	48,0	44,0	15
250	246,5	233,0	177,5	193,8	108,0	54,0	50,0	15
280	276,5	263,0	197,5	217,4	120,0	60,0	56,0	15
300	296,5	283,0	197,5	217,4	120,0	60,0	56,0	15
315	311,5	298,0	221,5	243,0	135,0	67,0	63,0	15
355	351,5	338,0	247,5	273,0	150,0	75,0	71,0	15
400	396,5	383,0	277,5	304,0	168,0	84,0	80,0	30

60

MESSDUESEN FUER VOLUMENSTROMREGLER MIT
ELEKTRONISCHER UND PNEUMATISCHER REGELUNG

VREIN_XX