# Series SAH22A SMART Air Hood® Balancing Instrument

## Specifications - Installation and Operating Instructions

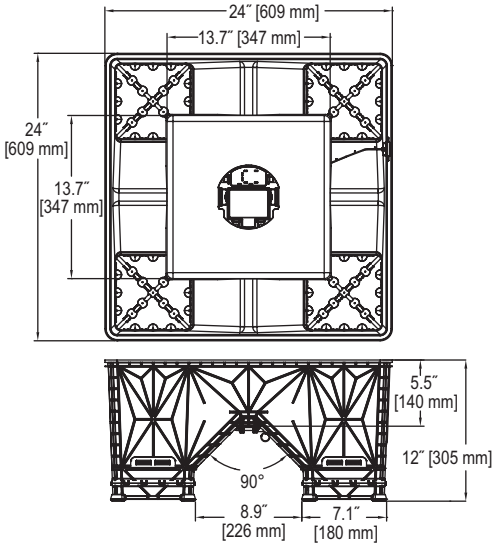


The **SERIES SAH22A** SMART Air Hood® balancing instrument is the most accurate and easy to operate air flow hood on the market. By using the included hood stand and wireless communications to a handheld device with the Dwyer Instruments PredictAir™ application software, a single operator can balance a branch in less time than traditional balancing teams. Besides being lighter than most traditional capture hoods, the ergonomic design makes the Series SAH22A easy to maneuver, with less physical stress. The rugged polypropylene base hood features patented Quad Flow Design Technology for controlling air flow and minimizing back pressure, which yields superior measurement accuracy. The Wi-Fi direct communication gives reliable communication with a distance of up to 200 yards between the hood and the handheld test instrument. The PredictAir™ application software reduces the number of steps in the air flow balancing process using Predictive Balancing's Express Balance mode. Predictive Balancing is a method of predicting the optimal flow set point for each register and the order in which they should be adjusted.

**INCLUDED WITH THE SAH22A**

1. Translucent gray SAH22A base unit with 2´ x 2´ (0.6 m x 0.6 m) opening
2. Extendable pole 2´ to 4´ (0.6 m to 1.2 m) with handheld test instrument connection
3. Installation and operating manual
4. Pole safety clamp
5. Stationary Pole Adapter
6. SAH22A travel case
7. Cable adapter to connect the SAH22A
8. Charger and cable for SAH22A and handheld test instrument

| MODEL CHART | |
|---|---|
| **Model** | **Description** |
| **SAH-22-IN** | SMART Air Hood® balancing instrument, 4 ft (1.2 m) extendable pole; batteries and handheld test instrument not included (international shipments only) |
| **SAH-22-LB** | SMART Air Hood® balancing instrument, 4 ft (1.2 m) and 12 ft (3.6 m) extendable poles; batteries not included |

**SPECIFICATIONS**

**Service:** Air.
**Volume Flow Units:** CFM, l/s, m³/h.
**Volume Flow Ranges:** Supply: 40 to 2000 CFM. (18.8 to 944 l/s) (68 to 3398 m³/h); Exhaust: 80 to 2000 CFM. (37.7 to 944 l/s) (136 to 3398 m³/h)
**Accuracy > 40 CFM:** ±3% of reading ±7 CFM (11.9 m³/hr) (3.3 l/s).
**Resolution:** 1 CFM (0.5 l/s) (1.7 m³/h).
**Operating Range:** 40 to 140°F (4.4 to 60°C).(277.6 to 333 K).
**Storage Range:** -4 to 122°F (-20 to 50°C).(253 to 323 K).
**Power Requirements:** 3.6 VDC NCR18650B MH12210 lithium ion battery, not included, user replaceable or (4) 1.5 VDC AA alkaline batteries, not included, user replaceable.
**Housing Material:** Polypropylene.
**Weight:** 5.75 lb (2.6 kg).
Agency Approvals: CE, FCC, IC, ANATEL, IFETEL, NOM, EAC. Complies with IMDA Standards.

**Please see Bulletin TE-SAH-SW for PredictAir™ Application Software instructions.**

www.volumenstrommessung.de

## FEATURE OUTLINES
### SAH22A Hood

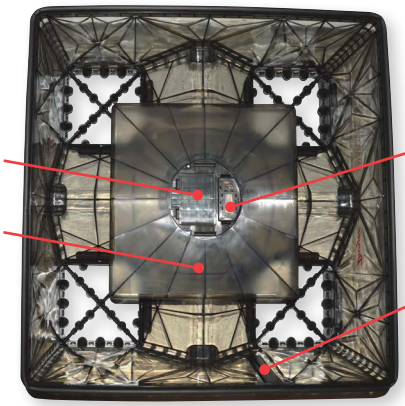


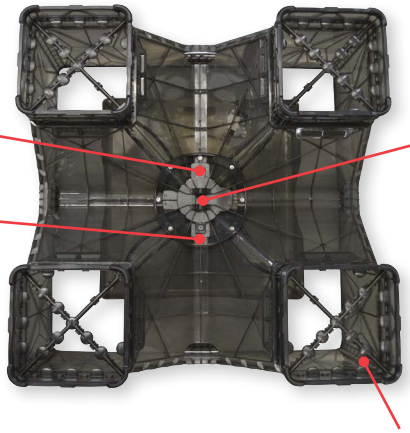


## INTRODUCTION

**WARNING** Do not use the SAH22A for liquid or gas mixtures other than air. No responsibility will be taken by Dwyer Instruments, Inc. for any resulting damage to the unit or to the operator if it is used with corrosive or dangerous or explosive gas mixtures. When using the SAH22A to check air flow at ceiling diffusers, make certain that you can raise and hold the unit safely during use. This instrument is not classified as flameproof or intrinsically safe; therefore, it must not be used where an explosion hazard may exist. The unit is not authorized for use on life support applications.

**Note:** Observe standard safety procedures when working on ladders and scaffolding. Also, ensure the unit does not become caught in moving machinery or on sharp objects.

**CAUTION**

- If stored under conditions outside normal operating range, allow the unit to stabilize at room conditions before use.
- Take care when carrying the assembled unit from place to place.
- Avoid people and nearby equipment.
- Avoid objects that may damage the capture hood.
- Turn the instrument off before storage or transportation and remove the batteries if storing for long periods of time.
- Avoid subjecting the quad flow sensing grids to excessive loading during use or assembly. Any air flow other than through the calibrated sensing holes, such as any hair-line cracks, will seriously affect the sensitivity.
  A damaged quad flow sensing grid must be replaced. It cannot be repaired.
- Do not disassemble the quad flow sensing grids from the capture hood while taking readings or balancing. The retaining structure is specifically designed to accommodate loading due to normal operation.
- Under low humidity conditions, static electric charges may be encountered. These can be avoided by applying a suitable anti-static solution.

## SETUP
### Battery Requirements

#### SAH22A Battery

**WARNING** **Fire Hazard While Charging Battery**
Match the lithium-ion battery polarity symbols on the battery to the polarity symbols inside the battery bracket. **Failure to do so may result in personal injury or property damage.** The orientation of the polarity symbols on the battery must match the orientation of the label inside the SAH22A battery bracket (+ to +, - to -). The positive terminal of the NCR18650B battery is also marked by a wide black band on the battery.

A 3.6 VDC NCR18650B lithium ion battery, or the equivalent, needs to be purchased from a local supplier and installed properly before the SAH22A is operational.

Before beginning use with the SAH22A, it is suggested that the unit be charged using the included charging cable. Plug the mini-USB end of the cable into the unit's charging port and the USB end into the charging block.

#### Battery Backup
Four 1.5 VDC AA batteries can be used as a backup for the lithium ion battery.

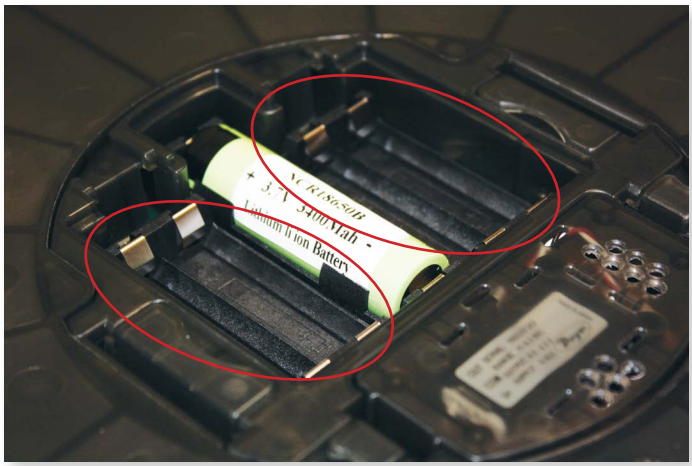

#### Lithium Battery Status
The LED lights on the hood change color and pattern depending on the status of the battery.

| LED Location | LED Color/Pattern | Lithium Battery Status |
|---|---|---|
| Hood & Power Button | Red (blink) | Battery is critically low |
| Hood & Power Button | Red (on) | Battery is low |
| Power Button | Red (on) | Battery is charging |
| Power Button | Green (on) | Battery is fully charged |

#### Powering the Unit
The SMART Air Hood® balancing instrument does not require assembly. Once the batteries are installed, the unit can be powered on by pushing the power button. It should turn green when turned on.

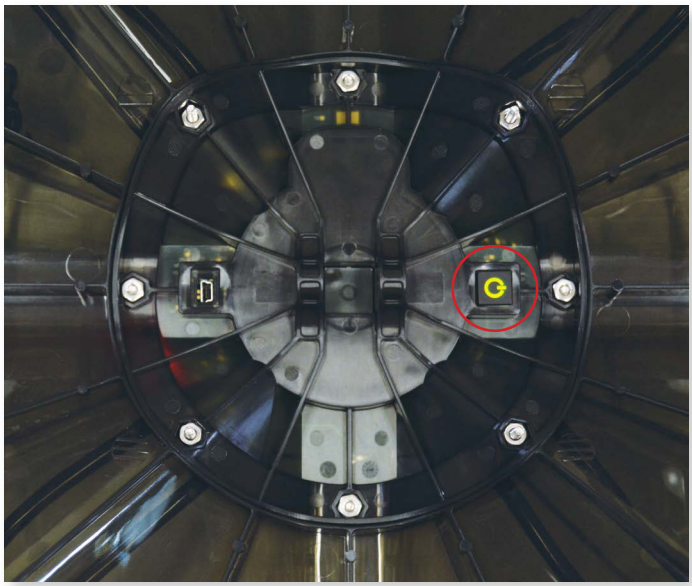

To turn off the hood, press and hold the power button until the LEDs turn off.

www.volumenstrommessung.de

## INSTALLATION

### Assembling Accessories

In order to place the hood onto a diffuser to measure air flow it needs to be mounted on the included extendable pole.

Before connecting the pole to the hood, the safety clamp must be slid onto the long pole. The safety clamp is designed to stop the pole from sliding if the pole sleeves are not locked into position. Slide the locking collar into position at the top of the middle sleeve of the pole and lock into place. The collar location may be adjusted to the height of the user.

To connect the pole to the hood, align the hole at the end of the pole with the holes in the mounting plate of the hood. Insert the provided locking pin through the holes in order to lock the pole to the hood. When inserting the locking pin, start by placing it into the alignment hole on the opposite side from the power button as illustrated below. In order to insert or remove the pin, press in the button on the end of the pin.

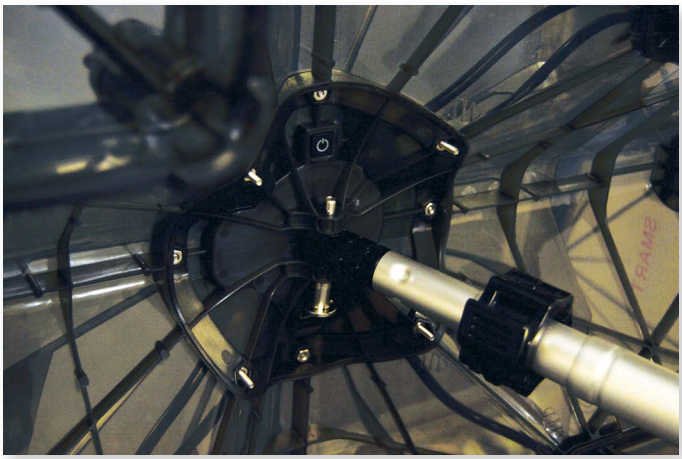

When using the short pole or with the SAH22A adapter base kit for canvas hoods, the stationary pole adapter should be used to keep the pole from pivoting. Place the stationary pole adapter onto the SAH22A and attach using the screws and wing nuts provided (below). Once secure, insert the short pole and secure in place using the locking pin.

To attach the handheld to the pole secure the handheld locking device to the pole as shown below. Secure handheld to pole using locking attachment on the back of the handheld by inserting it into the locking device on the pole and rotating 1/4 turn.

Once the handheld is attached to the pole, the SAH22A is ready for use. Note, handheld instrument shown above is for illustrative purposes only.

For shorter ceilings it is recommended to leave the top section of the pole inserted into the pole and adjust the height with the middle section for greater stability.

## OPERATION

### Connecting the SMART Air Hood® Balancing Instrument to the PredictAir™ Application Software

The LED lights on the hood blink in certain patterns depending on its communication with the handheld.

| Blue LED State | Red LED State | Connection Status |
|---|---|---|
| 50% duty cycle | 50% duty cycle | Not connected |
| 20% duty cycle | 20% duty cycle | Attempting to connect |
| 5% duty cycle | 5% duty cycle | Connected |

### Placing the SMART Air Hood® Balancing Instrument on a Diffuser

Place the hood on the diffuser and ensure that there are no leaks by visually inspecting that the hood seal completely surrounds the diffuser. Make sure to check every side and corner of the hood and verify that it is sealed onto the diffuser.

Once the hood is placed correctly, twist the pole to adjust the pole length so that it reaches the floor supporting the hood itself. If the hood is not securely in place, then re-adjust the pole length.

www.volumenstrommessung.de

## FCC/INDUSTRY CANADA NOTICE

**NOTICE** This device complies with Part 15 of the FCC rules. Operation is subject to the following two conditions:
(1) This device may not cause harmful interference, and (2) this device must accept any interference received, including interference that may cause undesired operation.

This equipment has been tested and found to comply with the limits for a Class B digital device, pursuant to Part 15 of the FCC Rules. These limits are designed to provide reasonable protection against harmful interference in a residential installation. This equipment generates, uses, and can radiate radio frequency energy and, if not installed and used in accordance with the instructions, may cause harmful interference to radio communications. However, there is no guarantee that interference will not occur in a particular installation. If this equipment does cause harmful interference to radio or television reception, which can be determined by turning the equipment off and on, the user is encouraged to try to correct the interference by one or more of the following measures:

- Reorient or relocate the receiving antenna.
- Increase the separation between equipment and receiver.
- Connect the equipment to an outlet on a circuit different from that to which the receiver is connected.
- Consult the dealer or an experienced radio/TV technician for help.

**NOTICE** This device complies with Industry Canada license-exempt RSS standard(s). Operation is subject to the following two conditions:

1. This device may not cause harmful interference;
2. This device must accept any interference received, including interference that may cause undesired operation of the device.

**CAUTION** Pursuant to FCC 15.21 of the FCC rules, changes or modifications not expressly approved by Dwyer Instruments, Inc. may void the user's authority to operate the equipment.

## RF NOTICE

**NOTICE** This product complies with FCC OED Bulletin 65 and Industry Canada's RSS-102 radiation exposure limits set forth for an uncontrolled environment.

**NOTICE** This Class B digital apparatus complies with Canadian ICES-003.

**CAUTION** The antenna used for this transmitter must maintain a separation of at least 20 cm from all persons and must not be co-located or operating in conjunction with any other antenna or transmitter.

**AVIS** Cet appareil est conforme á Industrie Canada une license standard RSS exonérés (s). Son fonctionnement est soumis aux deux conditions suivantes:

1. Cet appareil ne doit pas provoquer d'interférences,
2. Cet appareil doit accepter toute interférence reçue, y compris les interférences pouvant provoquer un fonctionnement indésirable de l'appareil.

**AVIS** Ce produit est conforme aux limites d'expositions aux rayonnements définies pour un environnement non contrôlé du Bulletin 65 FCC OET et RSS-102 Industry Canada.

Complies with IMDA Standards

## TROUBLESHOOTING

| Reported Problem | Possible Solution |
|---|---|
| No data or data does not change | - Verify sensor module is plugged in<br>- Check for leaks in diffuser sealing tubing<br>- Verify connection by looking at LED blinking pattern<br>- Verify quad flow sensing grids are fully seated and not damaged<br>- Verify the hood has a good seal with the diffuser/grille<br>- Check for any blockage in the inlets and outlets of the hood<br>- Check for cracks in the hood body |
| Reading is too high or low | - Verify quad flow sensing grids are fully seated and not damaged<br>- Verify the hood has a good seal with the diffuser/grille<br>- Check for any blockage in the inlets and outlets of the hood<br>- Check for cracks in the hood body<br>- Check for possible damage in the rubber seal |
| Cannot connect to hood | - Verify the SAH22A within the proximity of the handheld instrument<br>- Restart the PredictAir™ application software<br>- Turn the hood off and then on<br>- Check the battery status of both the hood and handheld instrument |

## MAINTENANCE

Some simple routine maintenance after each use will ensure that the instrument will function correctly for many years.

- Remove any moisture droplets using a clean, absorbent lint-free cloth/paper towel before storing the unit.
- Remove all batteries if the unit is to be stored for an extended period of time.
- Always store and transport the unit carefully. Store in dry conditions.
- DO NOT immerse the hood in water.• DO NOT use abrasive cleaning products on the hood. The hood can be wiped clean with a damp lint-free cloth.
- DO NOT use abrasive cleaning products on the quad flow sensing grids, which may block or damage the grid. The grid may be CAREFULLY wiped clean with a lint-free cloth. Ensure the air entry holes of the quad flow sensing grids are not contaminated with moisture.
- Check periodically for damage or any visible cracks.
- Take care to not damage or obscure the air entry holes of the quad flow sensing grids. This can impact measurement data.

Anti-static solution can be applied to the instrument by using a clean, lint-free cloth and carefully rubbing it over the instrument.
**Note:** This is normally only necessary when working in low humidity conditions.

### Annual Calibration

It is recommended to have the unit calibrated annually to ensure the accuracy of the unit. For calibration purposes, all four quad flow sensing grids and the sensor module must be sent to a Dwyer authorized service facility. Contact customer service for more information.

## REPAIR

The Series SAH22A balancing instrument is not field serviceable and it is not possible to repair the unit. Field repair should not be attempted and may void warranty.

## WARRANTY/RETURN

Refer to "Terms and Conditions of Sale" in our catalog and on our website. Contact customer service to receive a Return Materials Authorization number before shipping the product back for repair. Be sure to include a brief description of the problem plus any additional application notes.

www.volumenstrommessung.de

electro-mation ...luftmesstechnik

ELECTRO-MATION GmbH
Münsterstr. 23-25
22529 Hamburg
GERMANY

Tel. 040 / 850-2320
Fax 040/ 850-4114
info@volumenstrommessung.de
www.volumenstrommessung.de